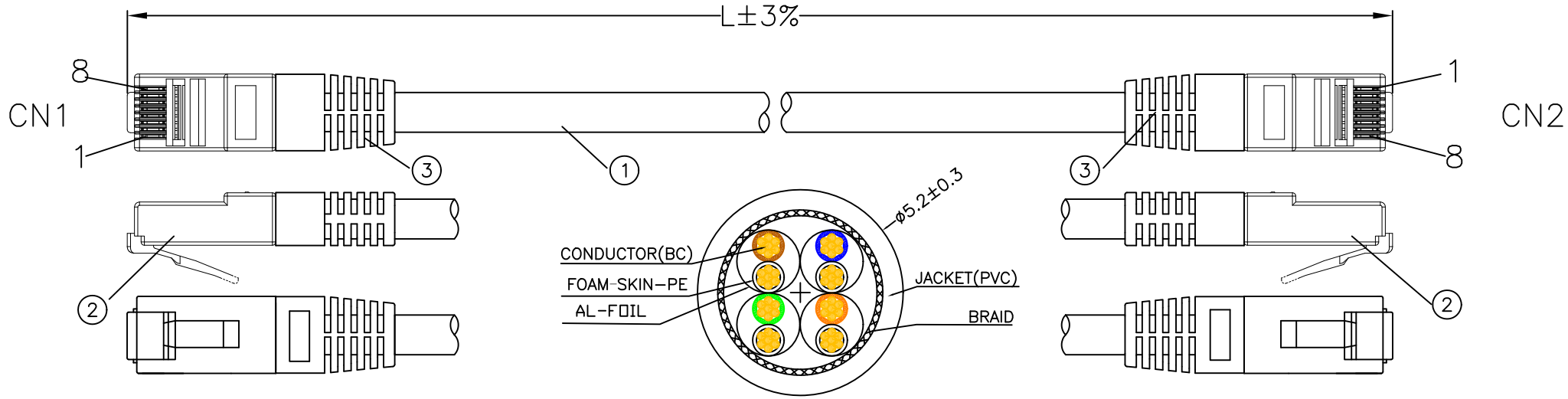

MATERIAL LIST:

NO.	PARTS NAME	SPECIFICATION DESCRIPTION
①	CABLE	S/FTP [28AWG(BC 7/0.127±0.005)*1PR+A]*4+B(AL-MG) +PVC OD:5.2±0.3mm COLOR:Assorted upon request
②	RJ45 CONNECTOR	RJ45,8P8C,TWO FORK GOLD PLATED CONTACTS TRANSPARENT WITH METAL HOUSING
③	MOLDING PVC	MOLDING PVC 45P COLOR:Assorted upon request

Marking: S/FTP CAT6 STRANDED 4P PATCH ISO/IEC 11801 AND ANSI/TIA-568-C.2

PIN OUT

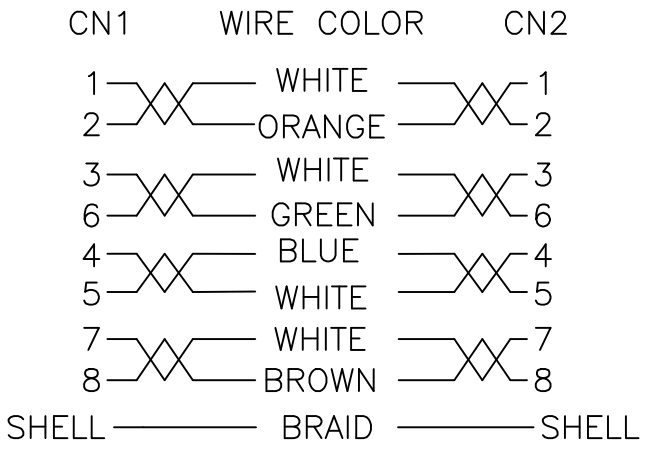

ELECTRONIC TEST:

A.OPEN/SHORT/INTERMITTENCE: 100%.

REMARK	NO	CHA.NO	SIGNATURE	DATE
DRAWN BY	Renzhi			
CHECKED BY				
AUDITED BY		APPROVED BY		
CRAFT		DATE	2022.09.27	

CAFCA Le réseau d'un bout à l'autre

SIGN				W.T	SCALE

PAGE OF

S/FTP CAT6 28AWG PVC

ITEM NO. (SECTION SHEET)